PARS LENT
BRAKE PADS

PL 29171 | WVA No. : 29171 | THK : 30 mm

BPW (SB 4309 W, - , SB 4309, -)
IRAN KAVEH
KNORR BREMSE (SK 7 (BPW), -)
WABCO (Perrot Bremse) (RVI (PAN 19-2), -)

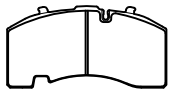

KNORR SK 7

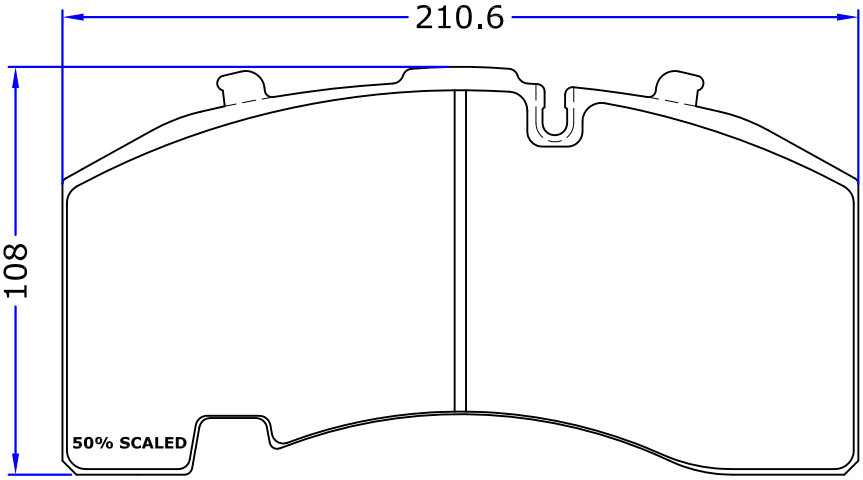

4 PIECES

OE REF :
BPW
0509290060
0509290080
0980106440
0980106950
0980107260

WWW.PARSLENT.COM