PARS LENT
BRAKE PADS

PL 29030 WVA No. : 29083 & 29030 & 29113 THK : 28 mm

DENNIS (Lancet Series, -)
HEULIEZ (Acess-bus, 01/96 - 12/05)
KAROSA (Agora)
RENAULT TRUCKS (Agora, 01/96 -, Iliade, 01/97 -, Magnum, 09/90 -, Major, 05/91 - 10/96, Premium, 04/96 - ,Series 300, 09/91 - 02/02)

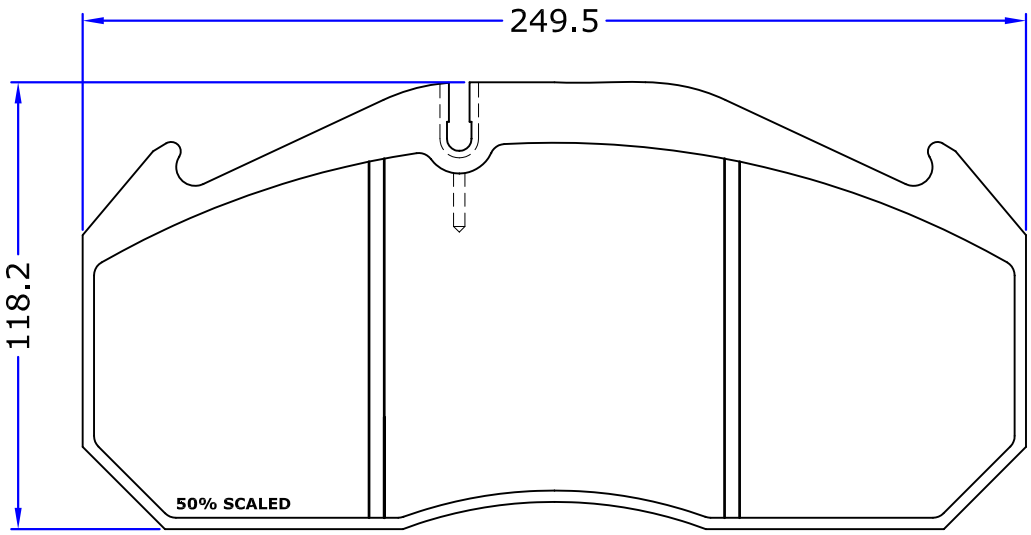

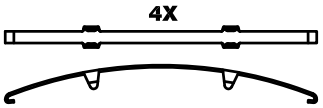

4 PIECES

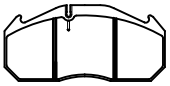

MERITOR D-3

Front Axle
Rear Axle

OE REF:
MAN
81508205091
8150820646
RENAULT
5001823000
5001854342

WWW.PARSLENT.COM