PARS LENT
BRAKE PADS

PL 21378

WVA No. : 21378

THK : 15 mm

FORD USA
PROBE, 08/88 - 07/93
MAZDA
626 Mk II (GC), 11/82 - 09/87
626 Mk III (GD), 06/87 - 05/92
626 Mk III Coupe (GD), 06/87 - 05/92
626 Mk III Estate (GV), 09/87 - 09/97
626 Mk III Hatchback (GD), 06/87 - 05/92
MX-6 (GD), 10/87 - 01/97

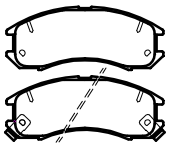

AKEBONO

F

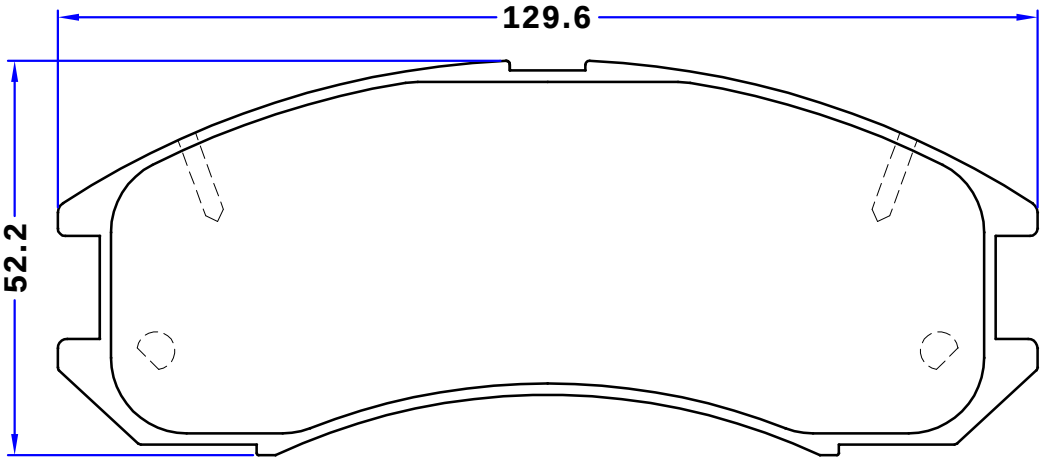

2 OUTER PIECES
1 INNER PIECE WITH RIGHT WEAR INDICATOR SPRING
1 INNER PIECE WITH LEFT WEAR INDICATOR SPRING

OE REF:
FORD
3477468
3521846
3521847
E92Z2001A
MAZDA
E92Z2001B
F32Z2001A
G2113328Z
GJ213328ZA
GJ213328ZB
GJY13328Z
GJY13328Z9A
GN513323Z
GN513328Z
GN513328Z9A
MITSUBISHI
GN603328Z