# PARS LENT
## BRAKE PADS

# PL 21679

**WVA No. : 21679**

**THK : 15 mm**

**TOYOTA**
4 RUNNER (KZN18_, VZN18_, RZN18_), 11/95 -
4 RUNNER (RN1_, VZN1_), 08/87 - 03/96
HILUX Closed Off-Road Vehicle (ZN13_, LN9_, RN1_, YN8_, LN8_, 09/88 -
HILUX II Pickup (_N1_, LN8_, RN5_, LN6_, YN6_, YN5_, LN5_, R, 11/82 - 07/05
LAND CRUISER (PZJ7_, KZJ7_, HZJ7_, BJ7_, LJ7_, RJ7_), 03/84 -
LAND CRUISER 90 (_J9_), 04/95 -
LAND CRUISER Hardtop (_J7_), 07/90 - 05/96
**VOLKSWAGEN**
TARO, 04/89 - 03/97

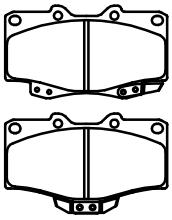

SUMITOMO

F

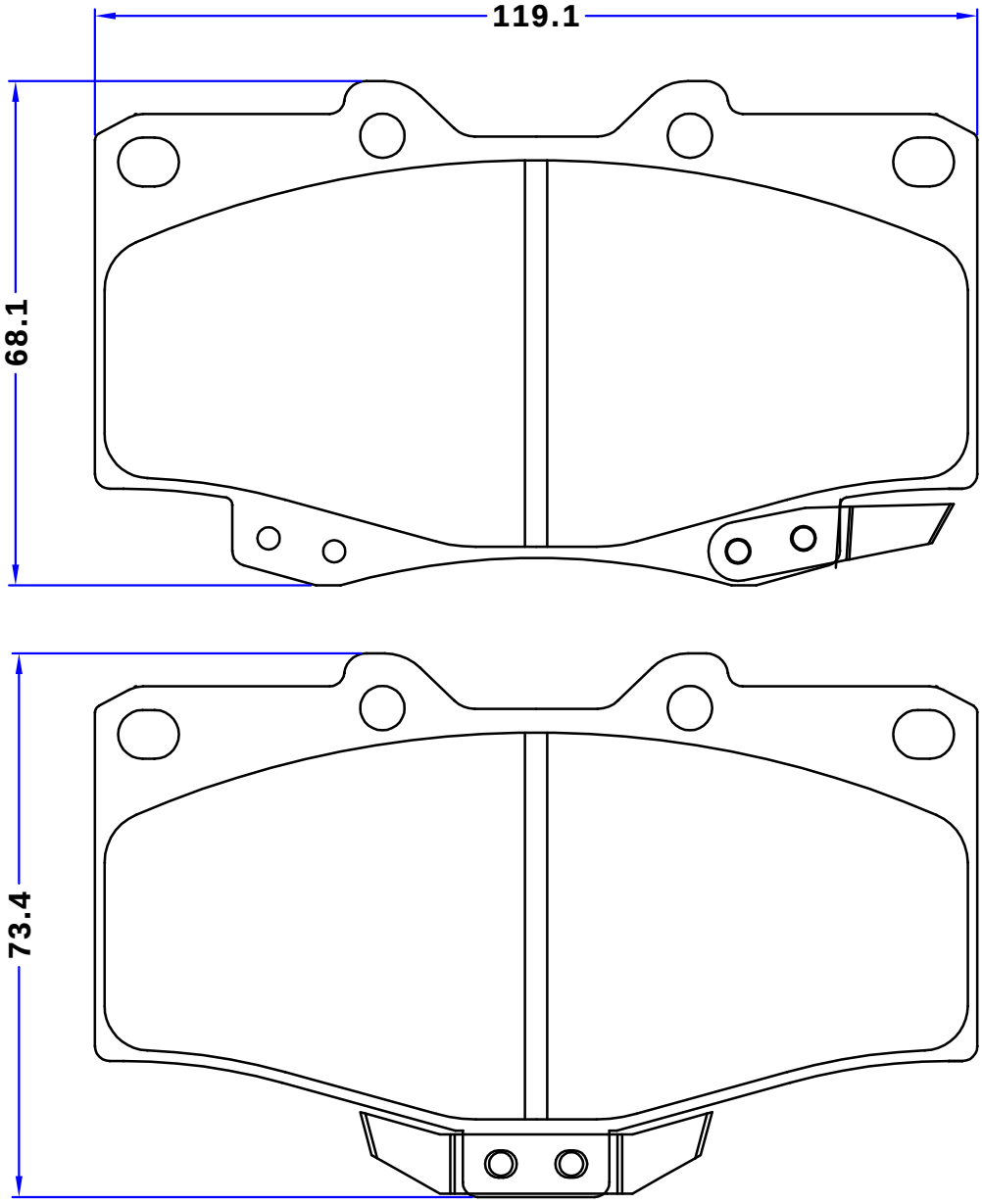


2 PIECES WITH CENTRAL WEAR INDICATOR SPRING
1 PIECE WITH RIGHT WEAR INDICATOR SPRING
1 PIECE WITH LEFT WEAR INDICATOR SPRING

**OE REF:**
**AUDI**
J0446535040
J0449135160
J0466535040
**SEAT**
J0446535040
J0449135160
J0466535040

J0446535040
J0449135160
J0466535040
**TOYOTA**
0446535030
0446535031
0446535040
0446535080
0446535140
0446535190
0446535230
0446535240
0446535260
0446535280
0446560030
0446560130
0446560260
04465YZZAF
04465YZZBD
04465YZZDH
04465YZZDJ
0449135160
0449135190
0449135240
0449135241
0449135260
0449160070
0449160080
**VOLKSWAGEN**
J0446535040
J0449135160
J0466535040